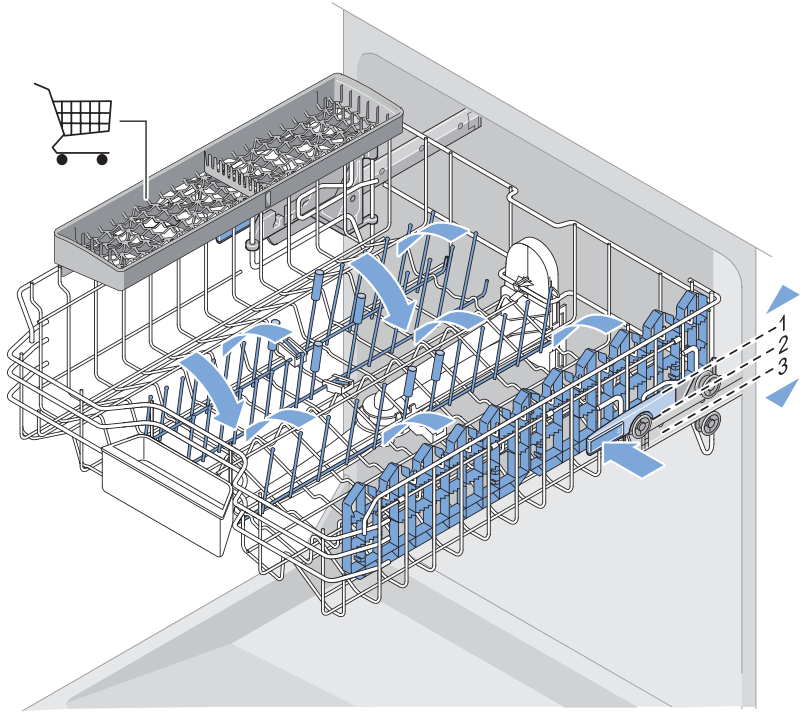
1
2
3

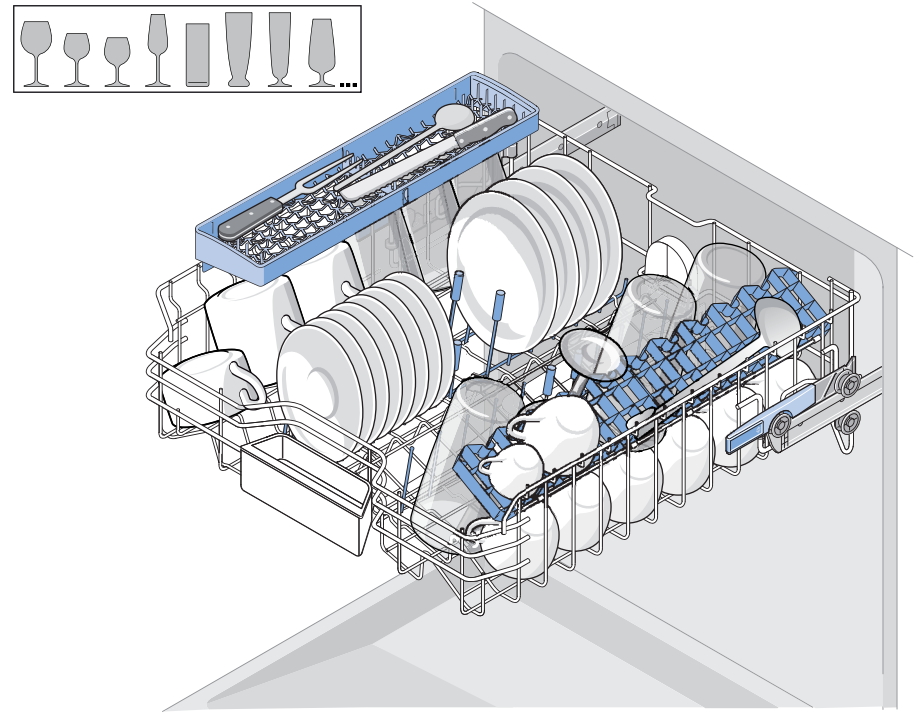

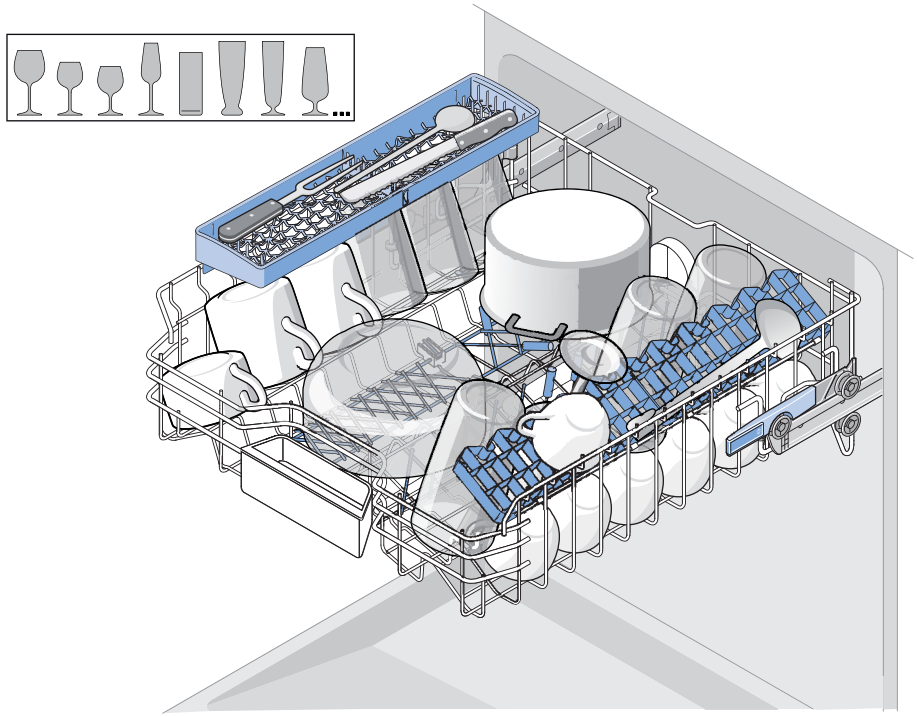

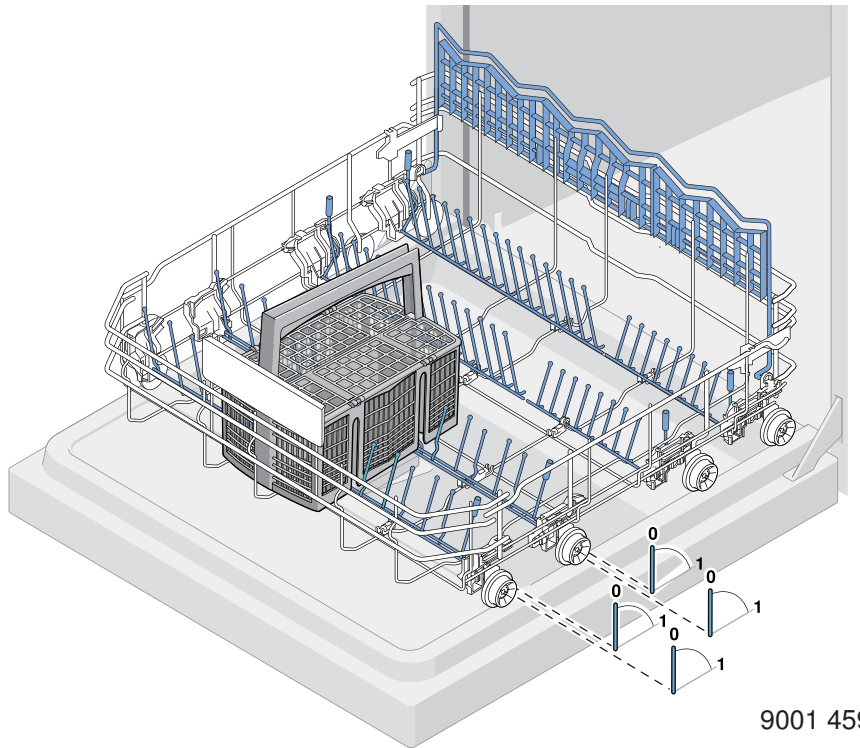
0
1
0
1
0
1
0
1

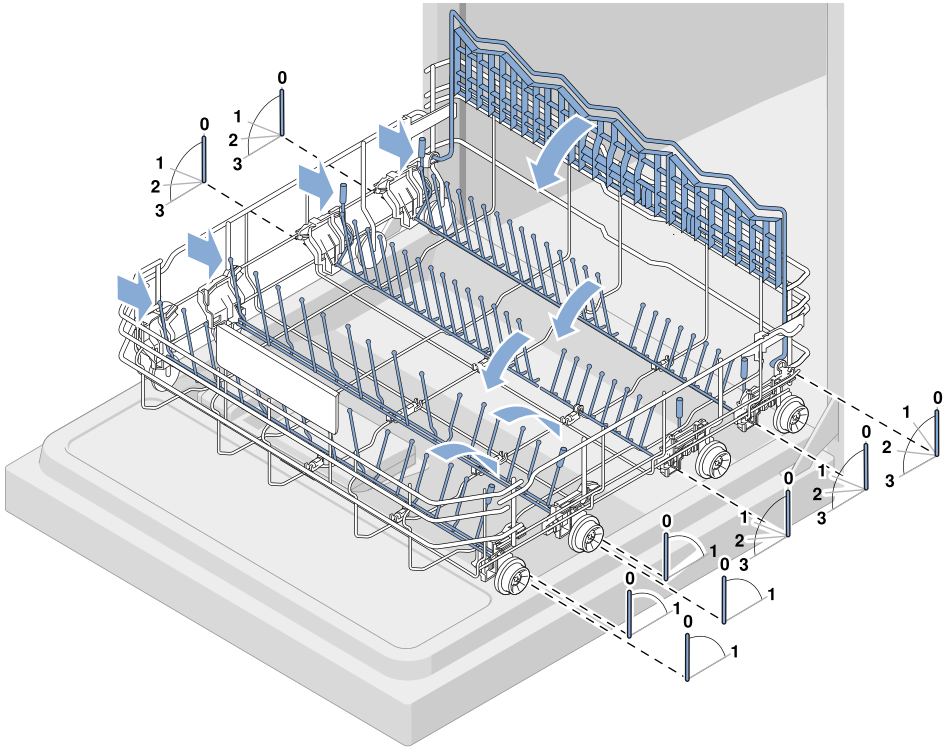

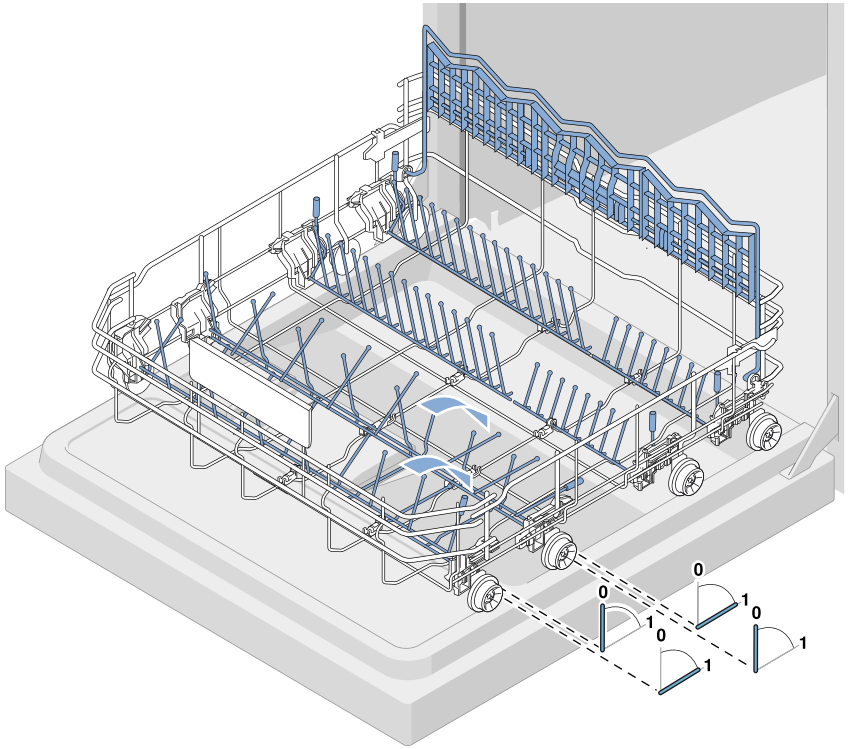

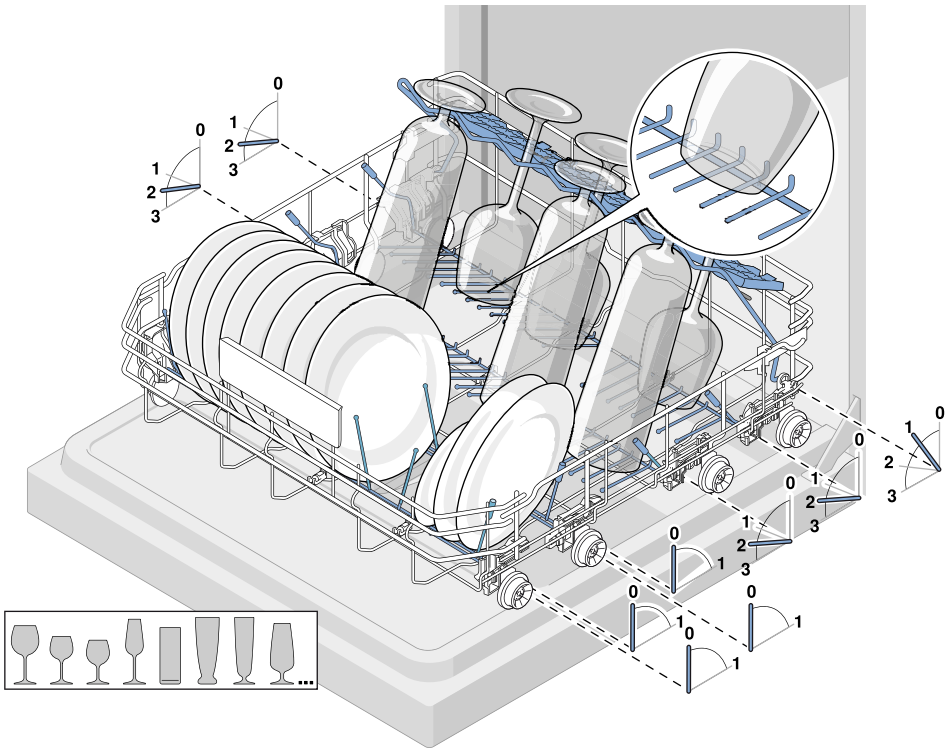

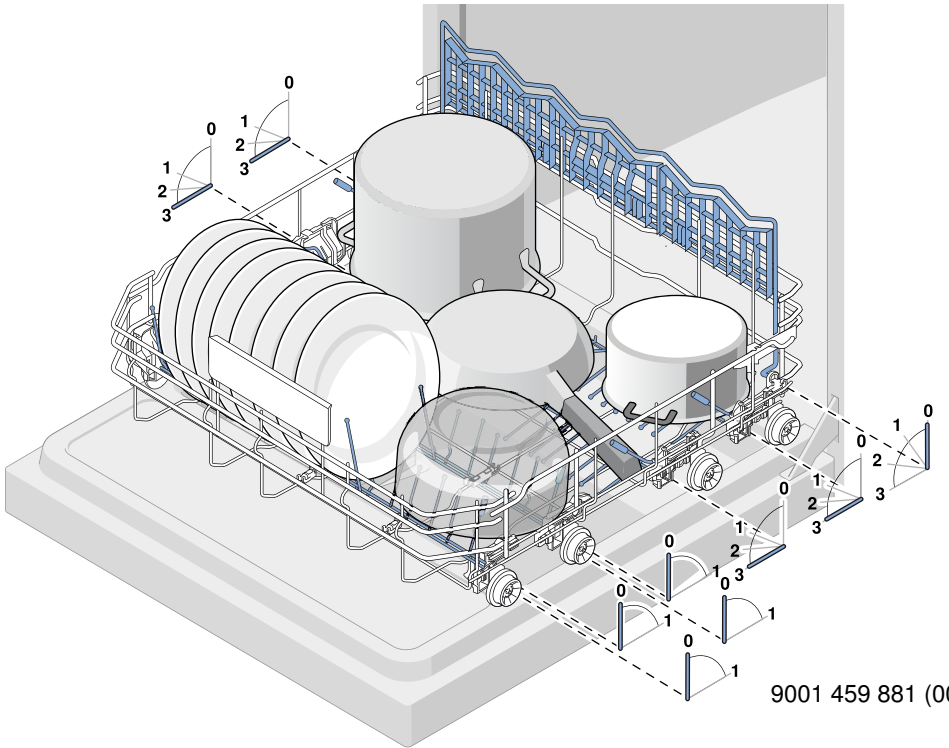

9001 459 881 (0003)